LHD®

LOAD HANDLING DEVICES

ZEUS 65-165
TWIN-MOTOR

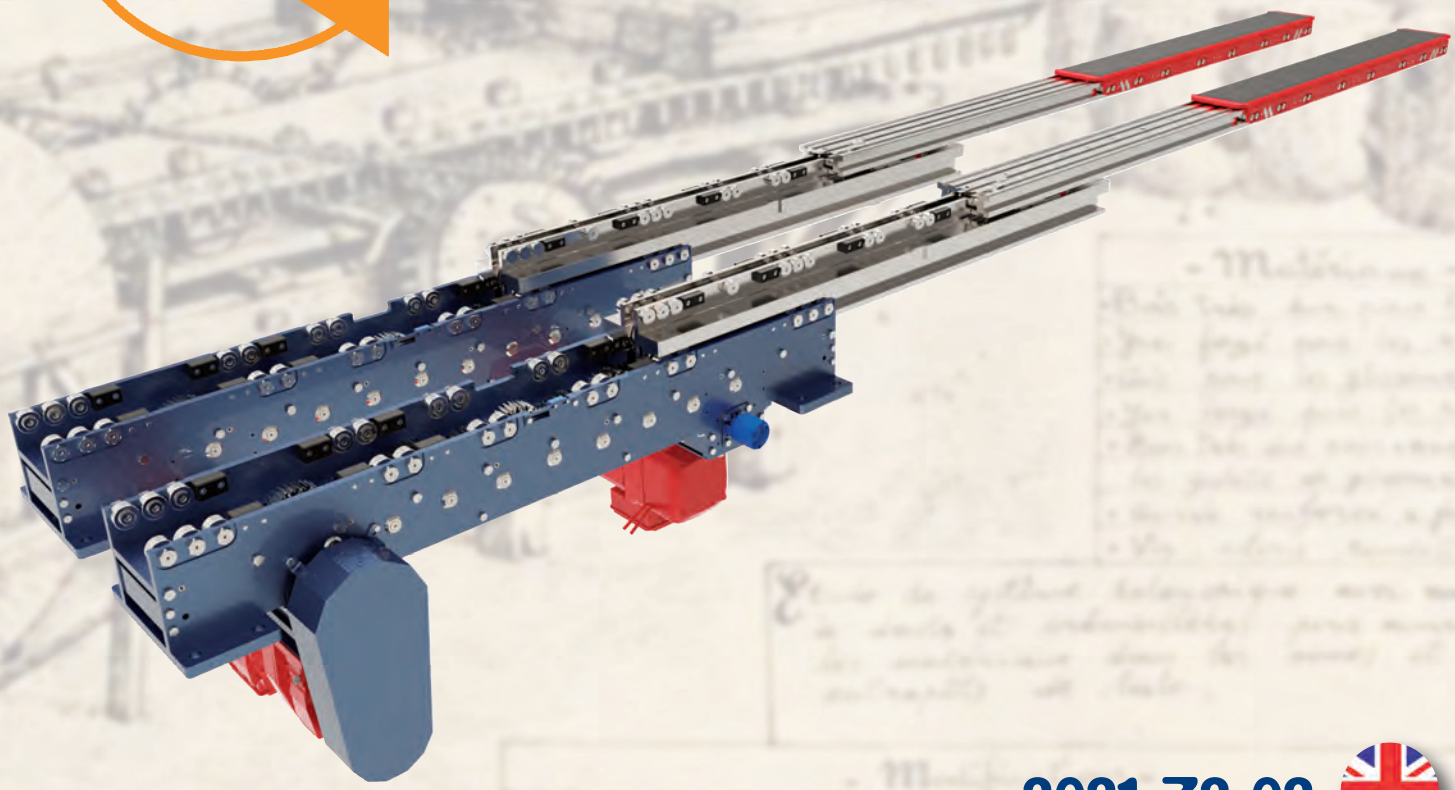

2021-Z2-02

ZEUS 65-165

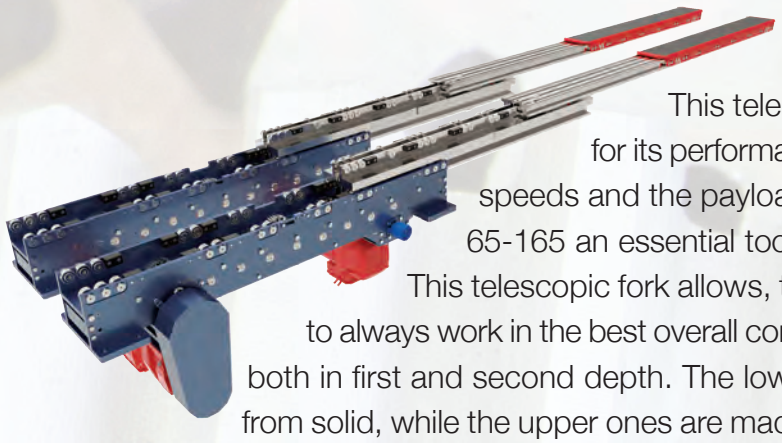

This telescopic fork is the queen of LHD production, both for its performance and its versatility. The small size, the operating speeds and the payload during picking and depositing make the ZEUS 65-165 an essential tool to be performing and competitive in this sector. This telescopic fork allows, thanks to the combined action of its gear motors, to always work in the best overall conditions and to optimize the action in small spaces, both in first and second depth. The lower and intermediate slides are machined (milled) from solid, while the upper ones are made from a single folded piece, for greater strength.

PRODUCT CODE	Q LOAD (KG)	L FIXED BODY LENGTH (MM)	Ls UPPER SLIDE LENGTH (MM)	S1 SINGLE DEPTH STROKE (MM)	S2 DOUBLE DEPTH STROKE (MM)	MAX BENDING UNDER LOAD IN 1st DEPTH (MM)	MAX BENDING UNDER LOAD IN 2nd DEPTH (MM)
Z65-165-120	1200	1200	1200	L+100	2500	21	51
Z65-165-125		1250	1240		2600	24	56
Z65-165-130	1000	1300			2750	22	58
Z65-165-135		1350			2800	24	59
Z65-165-140		1400			2850	26	
Z65-165-145	900	1450			2950	25	58
Z65-165-150		1500			3000	27	

This type of fork allows you not to have to lift the pallet in the first depth.

It's only available in the chain version.

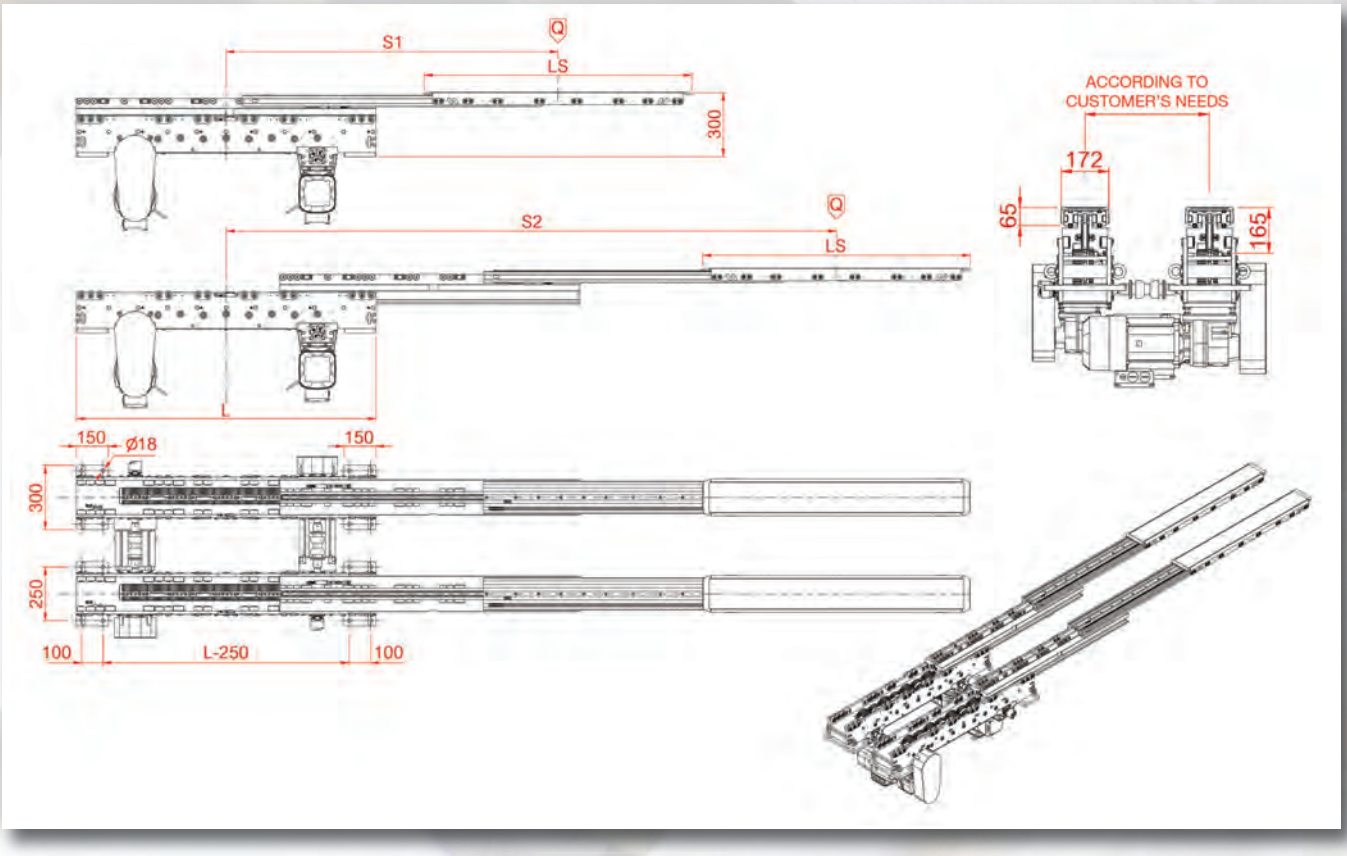

LHD
LOAD HANDLING DEVICES

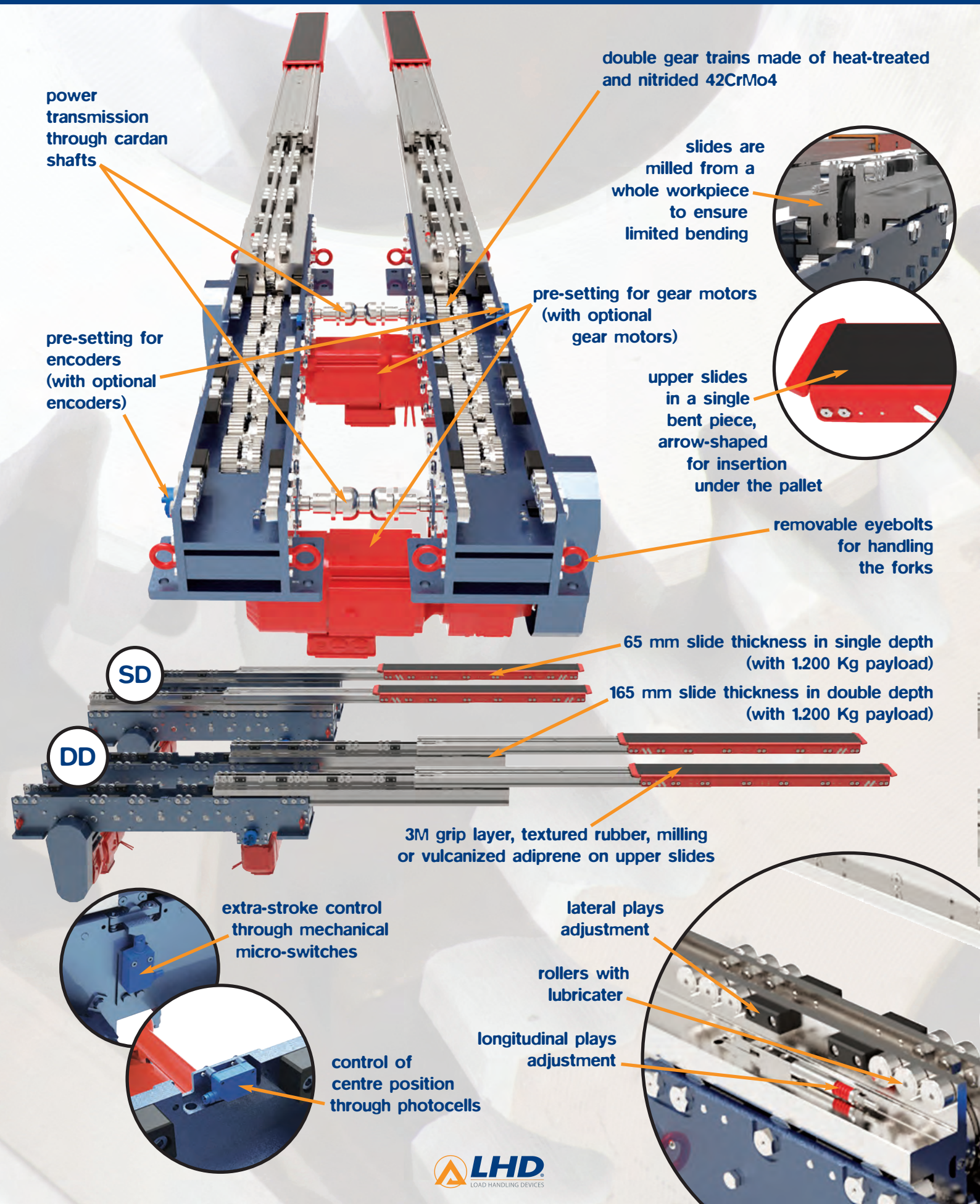
power transmission through cardan shafts
double gear trains made of heat-treated and nitrided 42CrMo4
slides are milled from a whole workpiece to ensure limited bending
pre-setting for gear motors (with optional gear motors)
pre-setting for encoders (with optional encoders)
upper slides in a single bent piece, arrow-shaped for insertion under the pallet
removable eyebolts for handling the forks
SD
DD
65 mm slide thickness in single depth (with 1.200 Kg payload)
165 mm slide thickness in double depth (with 1.200 Kg payload)
3M grip layer, textured rubber, milling or vulcanized adiprene on upper slides
extra-stroke control through mechanical micro-switches
control of centre position through photocells
lateral plays adjustment
rollers with lubricater
longitudinal plays adjustment
LHD
LOAD HANDLING DEVICES

follow us on

HeadQuarter - LHD S.p.A.
Europe production site

Mr. Giuliano Rivoir
Mobile +39 345 187 9559
Phone/Fax +39 011 908 62 70
g.rivoir@lhd.co.com
info@lhd.co.com
Via Piossasco-Rivalta 30-32
10090 Bruino (TO), Italy
Skype lhd.spa

LHD China/太仓艾拉德
Taicang LHD Co., Ltd.
China production site

Mr. James Li/李泽俭
No. 68, East Luoyang Road,
Taicang E. D. Area, 215400 Taicang,
Jiangsu, China
Mobile/手机 +86 138 1781 2271
Phone/座机 +86 512 5354 7892
james.li@lhd.co.com

LHD South Korea

Mr. Ryang Park
G&S Seojin Co., Ltd.
#709 Ace K1 Tower, 166 Gasan
Digital 2-ro, Geumcheon-gu, 08503,
Seoul, South Korea
Mobile +82 10 2951 4960
rpark@gs-seojin.com

LHD Managing Director

Mr. Daniele Ribetto
Mobile +39 346 727 46 78
d.ribetto@lhd.co.com

LHD Western Europe, Russia & CIS

Mr. Jacopo Trivero
Mobile +39 391 350 64 30
j.trivero@lhd.co.com

LHD Deutschland, Österreich & Schweiz

Mr. Stefano Mereu
Mobile +39 391 763 55 79
s.mereu@lhd.co.com

LHD France

Mr. Joaquim Da Costa
Alfatec France
Z.I. Des Plattes III, 20 Chemin
Des Ronzières, 69390 Vourles, France
Phone +33 4 72 67 01 77
info@alfatecfrance.fr

LHD USA & Canada

Mr. Kyle VanOphem
Carlson - Dimond & Wright, Inc.
25201 Terra Industrial Drive
(Suite B) Chesterfield,
Michigan, 48051 USA
Mobile +1 (586) 320 3087
k.vanophem@lhd.co.com

LHD India

Mr. Mahmood Haider
Noida, New Delhi, India
Mobile +91 98910 98818
m.haider@lhd.co.com

LHD South East Asia

Mr. Roger Chen/陈雁
Mobile/手机 +86 133 0622 8955
roger.chen@lhd.co.com

LHD Taiwan

Mr. Bogen Tong/唐嘉鴻
Knowledge&Technology
Trading Co., Ltd
(81146) 1F., No.20, Jhongtai St.,
Nanzih District, Kaohsiung City 811,
Taiwan (R.O.C.)
Mobile: +886 921 250 790
Phone/Fax: +886 7 360 961(0)
bogen@germany-gear.tw

LHD Thailand

Mr. Teeradon Anumas
Master Automation Co., Ltd.
Phra Nakhon Si Ayutthaya,
Thailand
Mobile +66 8 5516 2777
teeradon.anumas@ma-thailand.com

LHD Vietnam

Ms. Alice Nguyen
Phuc An Automation Co., Ltd.
Hồ Chí Minh, Việt Nam
Mobile +84 28 3620 5731/5732
info@phucanvn.com

LHD After-Sales Service

Mr. Davide Gomez
Mobile +39 392 429 61 63
d.gomez@lhd.co.com